EQ-4101
株式-26

HOSHIZAKI

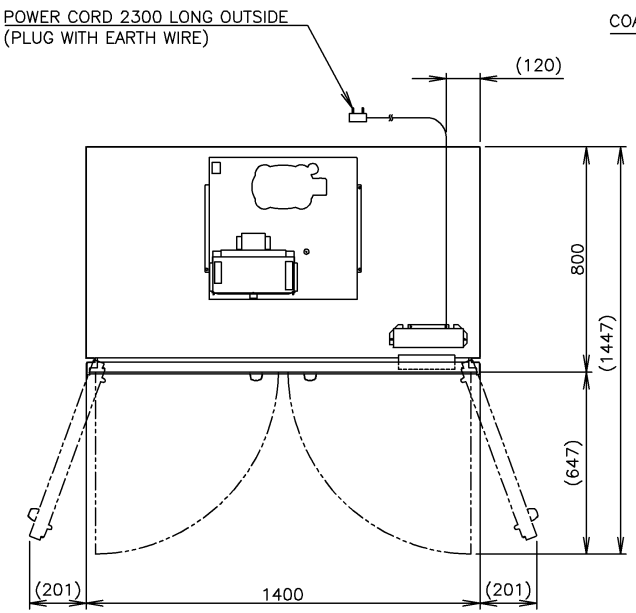

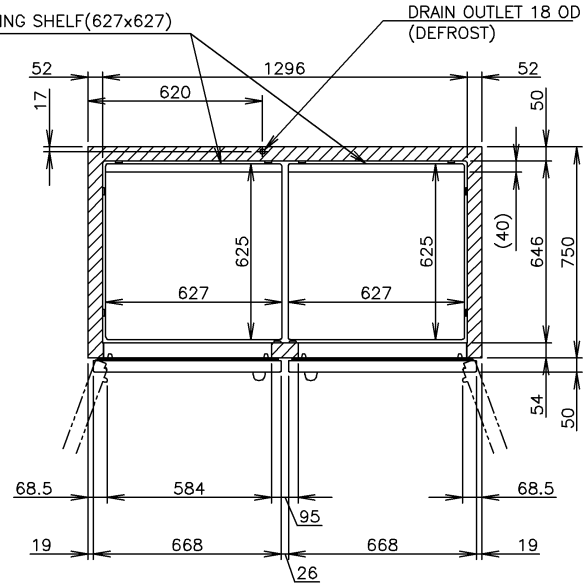

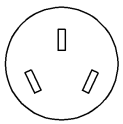

PLUG

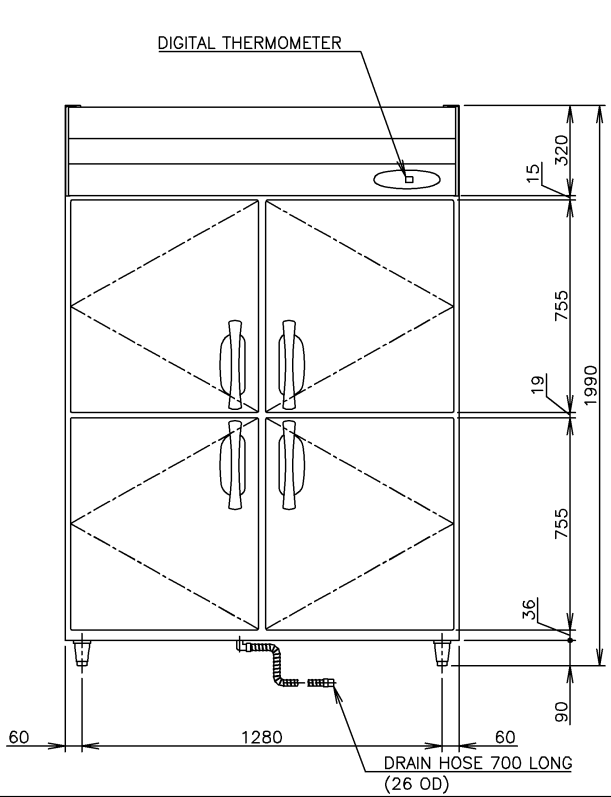

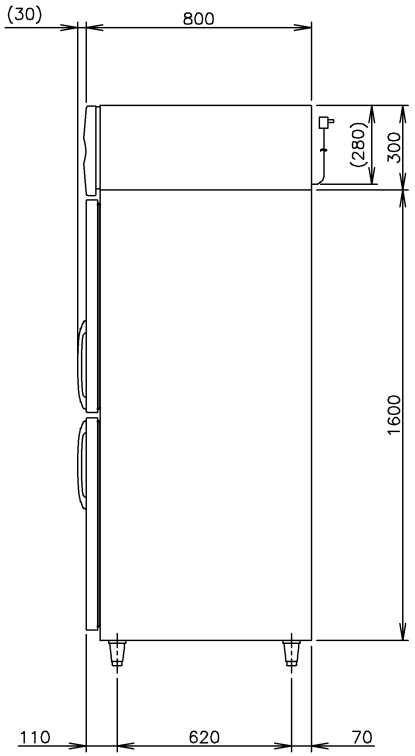

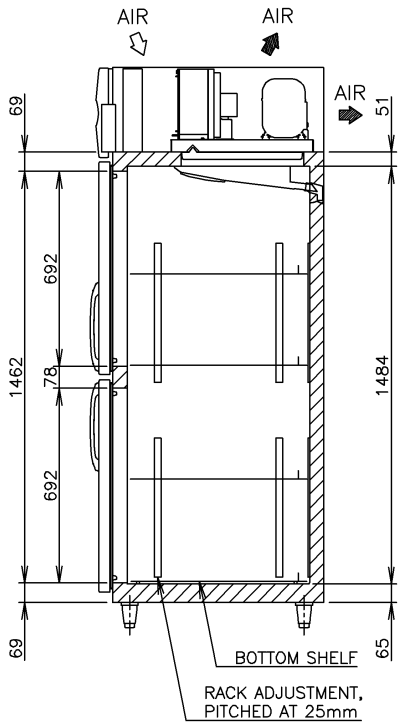

ITEM	Hoshizaki Reach-in Refrigerator
MODEL	HRE-147B-CHD
POWER SUPPLY	1 Phase 220 - 240V 50Hz Capacity: 0.86kVA (3.80A)
AMPERAGE	Rated: 2.94A Starting: 12.6A
ELECTRIC CONSUMPTION	501W (Power Factor: 75%) Heater: 302W Defrost: 302W
HEAT REJECTION	940W
POWER CORD	2.3m (Plug with Earth Wire)
EFFECTIVE CAPACITY	1311L
OUTSIDE DIMENSIONS	1400mm(W)× 800mm(D)× 1990(-2020)mm(H)
INSIDE DIMENSIONS	1296mm(W)× 646mm(D)× 1484mm(H)
EXTERIOR	Stainless Steel, Galvanized Steel(Rear, Bottom)
INTERIOR	Stainless Steel, ABS Plastic(Door)
INSULATION	Polyurethane Foam
INSULATION FOAM BLOWING AGENT	Cyclopentane
REFRIGERATION SYSTEM	Forced Air Circulation
DEFROST SYSTEM	Heater
1 COMPRESSOR	Hermetic 315W(Motor Size)
CONDENSER	Fin and Tube type, Air-cooled
EVAPORATOR	Fin and Tube type
REFRIGERANT	R134a
TEMPERATURE CONTROL	Microprocessor (Digital Temp. Indication) Adjustable from -6 to 12° C
DEFROST CONTROL	Microprocessor
ELECTRIC CIRCUIT PROTECTION	Earth Wire, Circuit Breaker
REFRIGERANT CIRCUIT PROTECTION	Motor Protector (Auto-reset)
LEG	Plastic Adjustable from 90 to 120mm
SHELF	8 pcs. (Include Bottom Shelf)
WEIGHT	152kg (Gross 177kg)
PACKAGE	Carton (Wooden Pallet) 1460mm(W)× 900mm(D)× 2075mm(H)
ACCESSORIES	Drain Hose× 1
OPERATING CONDITIONS	Ambient Temperature: 5 - 43℃ Voltage Range: Rated Voltage ±6%

*We reserve the right to make changes in specifications and design without prior notice.

1. Install the product properly in accordance with the instructions on location, water supply/ drain connections and electrical connections stated in the instruction and installation manuals provided.
   Allow 10mm extra space at the installation site to meet any installation requirements (additional spacing is also required for proper air flow and pipe connections).
2. The heat rejection is based on the reached pulldown temperature at ambient temperature of 43℃.
3. Product Code: R275

HOSHIZAKI REACH-IN REFRIGERATOR HRE-147B-CHD

APPROVED	CHECKED	DESIGNED	DRAWN	SCALE	
ISHIGURO	TAKAOKA	KATO	WATANABE	1/20	TRIGONOMETRY
ISHIGURO	KATO	1	2012.02.16	DATE 2011.12.13	DRAWING NO. D10751
APPROVED	DESIGNED	SYMBOL	DATE		SYMBOL 1

000520
施行