EQ−4101
様式−26

HOSHIZAKI

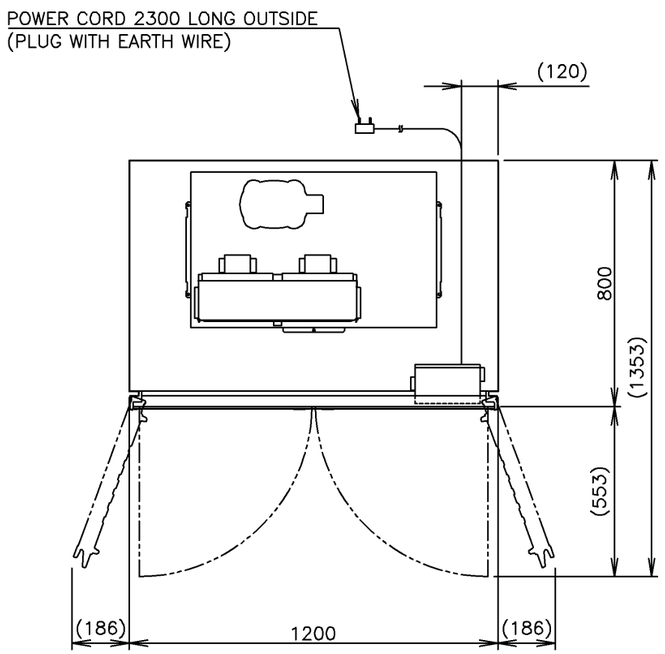

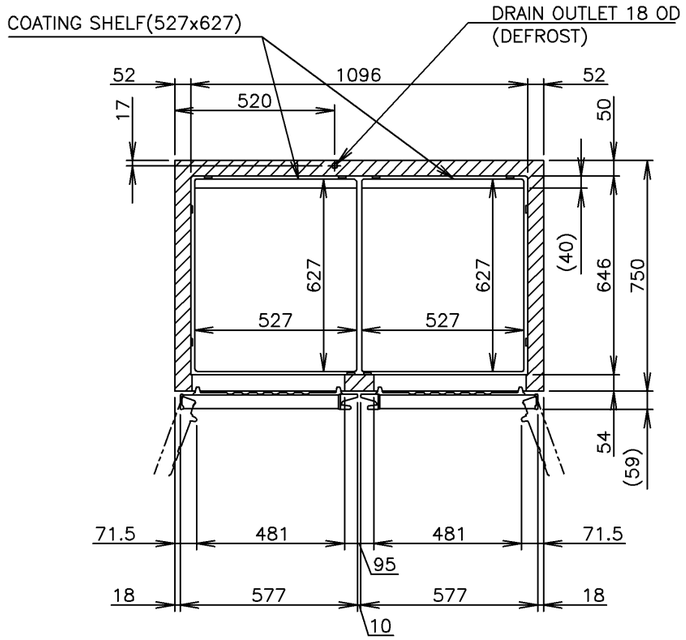

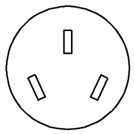

PLUG

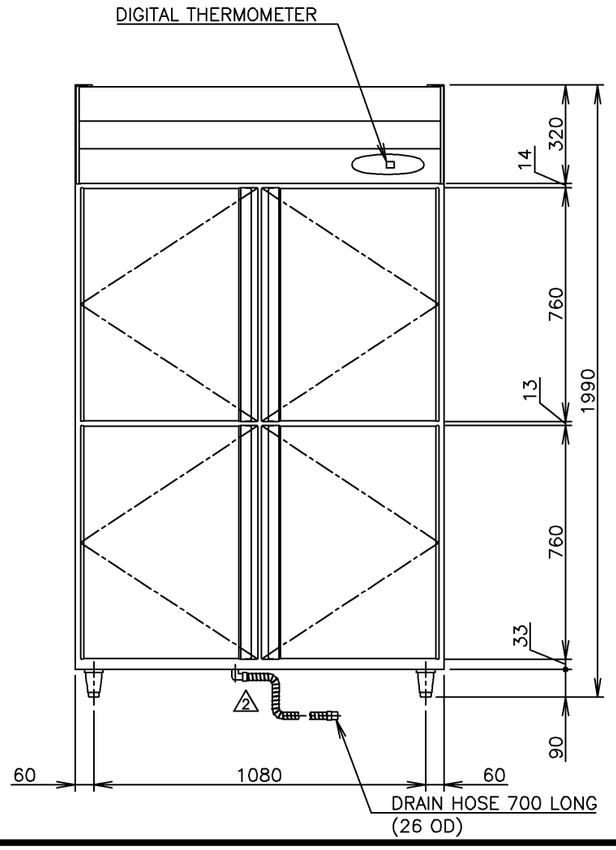

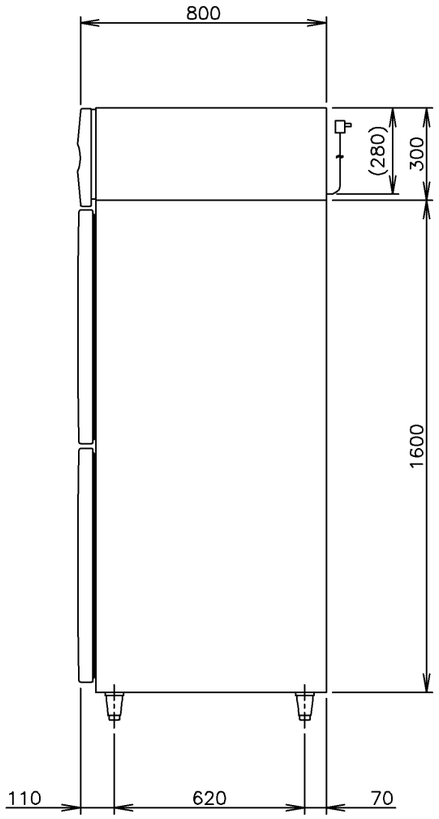

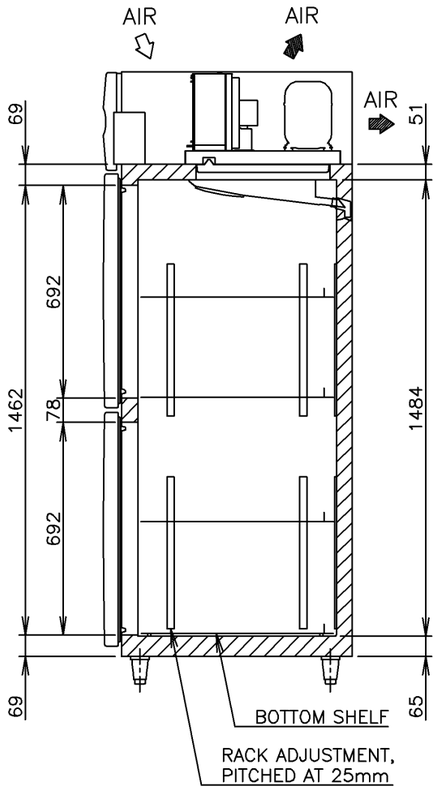

ITEM	Hoshizaki Reach−in Freezer
MODEL	HFE−127MA−CHD
POWER SUPPLY	1 Phase 220 − 240V 50Hz Capacity: 1.26kVA (5.80A)
AMPERAGE	Rated: 3.72A Starting: 21.0A
ELECTRIC CONSUMPTION	696W (Power Factor: 82%) Heater: 471W Defrost: 471W
HEAT REJECTION	1030W
POWER CORD	2.3m (Plug with Earth Wire)
EFFECTIVE CAPACITY	1100L
OUTSIDE DIMENSIONS	1200mm(W)× 800mm(D)× 1990(−2020)mm(H)
INSIDE DIMENSIONS	1096mm(W)× 646mm(D)× 1484mm(H)
EXTERIOR	Precoated Steel, Galvanized Steel(Rear, Bottom)
INTERIOR	Precoated Steel, ABS Plastic(Door)
INSULATION	Polyurethane Foam
INSULATION FOAM BLOWING AGENT	Cyclopentane
REFRIGERATION SYSTEM	Forced Air Circulation
DEFROST SYSTEM	Heater
COMPRESSOR	Hermetic 774W
CONDENSER	Fin and Tube type, Air−cooled
EVAPORATOR	Fin and Tube type
REFRIGERANT	R404A
TEMPERATURE CONTROL	Microprocessor (Digital Temp. Indication) Adjustable from −23 to −7℃
DEFROST CONTROL	Microprocessor
ELECTRIC CIRCUIT PROTECTION	Earth Wire, Circuit Breaker
REFRIGERANT CIRCUIT PROTECTION	Motor Protector (Auto−reset)
LEG	Plastic Adjustable from 90 to 120mm
SHELF	8 pcs.(Include Bottom Shelf)
WEIGHT	140kg (Gross 168kg)
PACKAGE	Carton (Wooden Pallet) 1260mm(W)× 900mm(D)× 2075mm(H)
2 ACCESSORIES	Drain Hose× 1
OPERATING CONDITIONS	Ambient Temperature: 5 − 43℃ Voltage Range: Rated Voltage ±6%

*We reserve the right to make changes in specifications and design without prior notice.

1. Install the product properly in accordance with the instructions on location, water supply/ drain connections and electrical connections stated in the instruction and installation manuals provided.
   Allow 10mm extra space at the installation site to meet any installation requirements (additional spacing is also required for proper air flow and pipe connections).
2. The heat rejection is based on the reached pulldown temperature at ambient temperature of 35℃.
3. Product Code: R267

HOSHIZAKI REACH−IN FREEZER HFE−127MA−CHD

APPROVED	CHECKED	DESIGNED	DRAWN	SCALE	TRIGONOMETRY
ISHIGURO	TAKAOKA	KATO	MINEZAWA	1/20	
ISHIGURO	KATO	2	2012.01.19	DATE 2011.02.10	DRAWING NO. D08191
APPROVED	DESIGNED	SYMBOL	DATE		SYMBOL 2

000520
施行